Normagrup
Sentido de la Tecnología

Product Environmental Profile of GS

Escape route emergency lighting

Reference product: G-150L

Registration number: NORM-00008-V01.01-EN	Rules "PCR-ed4-EN 2021 09 06" Supplemented by "PSR-0007-ed2.1-EN-2023 12 08"
Verifier accreditation number: V45	Information and reference documents: www.pep-ecopassport.org
Date of issue: 04-2026	Validity period: 5 years
Independent verification of the declaration and data, in compliance with ISO 14025:2010: Internal ☐ External ☒	
The PCR review was conducted by a panel of experts chaired by	
PEP are compliant with XP C08-100-1:2016 and EN 50693:2019 or NF E38-500 :2022 The components of the present PEP may not be compared with components from another program.	
Document in compliance with ISO 14025:2010 "Environmental labels and declarations. Type III environmental declarations"	

Environmentally Light!

Emergency lighting

NORMALUX
by Normagrup

1. GENERAL INFORMATION

1.1 COMPANY INFORMATION

"Lighting the future with efficient, safe and sustainable technological solutions"

The strategic approach of our corporate culture is based on a commitment to innovation, industrial excellence, and sustainability as fundamental pillars for moving toward a responsible future.
At Normagrup Technology, we are firmly committed to domestic manufacturing, ongoing research and technological development, and respect for sustainability, through a comprehensive approach that encompasses environmental, social, and economic dimensions, driving ethical and responsible growth.

Since its founding in 1971, the company has undergone a continuous process of development and expansion, becoming a benchmark in the technical lighting and safety sector, with a presence in various international markets. Its production model is governed by a commitment to innovation, care for the planet, occupational safety, equal opportunities, and contribution to local development.

We strive to bring innovative solutions to the market, always guided by a sixth sense engraved in our DNA: the sense of technology.

Everything we do is driven by the core principles of the Normagrup DNA:

Innovation

Imagining, creating, and daring to take the road less traveled is the only way to build the future.

Safety

Our very first development was an emergency light fixture, and since then, safety has remained a constant priority at Normagrup.

Confort y control

Our developments aim to make life more comfortable for everyone, with simple and intuitive operation.

Design

We care about the aesthetics and appearance of our products to create pleasant environments

Quality

The customer is the absolute priority of our work, and the quality of our products and services is always aimed at achieving their maximum satisfaction.

Sustainability

We design efficient products based on eco-design principles and with a life cycle aligned with circular economy principles.

Owner of the PEP: Normagrup Technology, S.A.

Location of production and assembly site:
Parque Tecnológico de Asturias
C/Ablanal, 1 33428 Llanera. Asturias. España

Legal contact:
Iván Peinado

Contact e-mail:
medioambiente@normagrup.com

Company website:
https://www.normagrup.com/

ENVIRONMENTAL COMMITMENT OF THE COMPANY

Normagrup Technology is a global company dedicated to the design, manufacture, and marketing of innovative technological solutions in lighting, signage, and emergency and detection systems, backlit fabrics, and hospital headwalls.

Since its origins, Normagrup has integrated environmental protection as a key pillar of its activity, implementing measures aimed at preventing, reducing, and controlling the environmental impacts associated with its production processes and products.

Driven by this strong commitment, an integrated quality and environmental management system was established according to ISO 9001:2015 and ISO 14001: 2015, respectively, based on a holistic approach to the continuous improvement of our processes. This enables us to advance toward efficient and resource-optimized manufacturing, minimize waste and emissions, and incorporate sustainability and efficiency criteria at every stage of our products' life cycle.

This vision is embodied in a strong commitment to evaluating the environmental impact of our products through Life Cycle Assessment (LCA), a key tool for objectively quantifying impacts from the manufacturing phase to end-of-life disposal. This approach allows us to progress toward designing safer products that integrate sustainability criteria from the outset, guiding our decisions toward continuous improvement.

The results of this study are reflected in this Environmental Product Declaration (EPD), which serves as a key element for the improvement and transparency of our products.

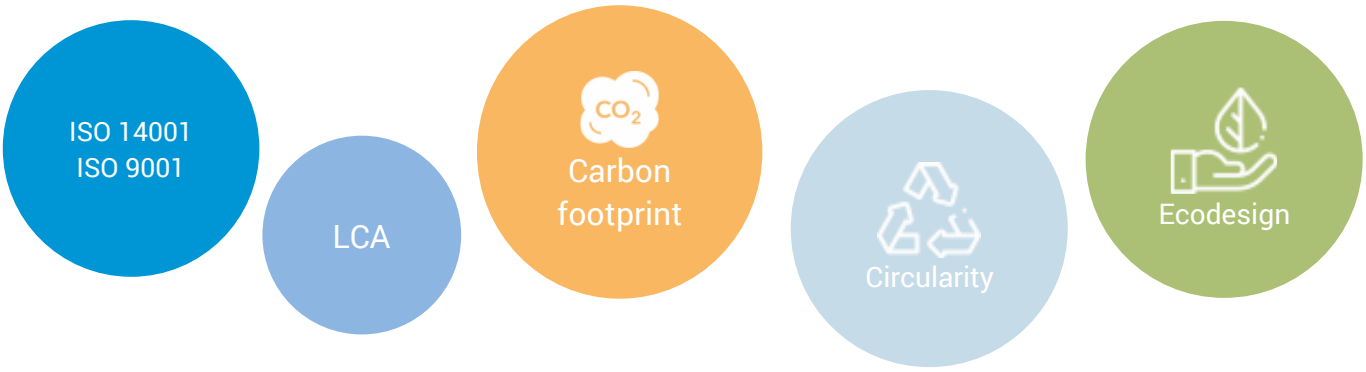

High IP protection and easy installation

Emergency lighting

GS

1.2 PRODUCT DESCRIPTION AND METHODOLOGY

The GS range embodies all the values that have always defined us: simple yet distinctive designs, robustness, efficiency and versatility. In short, the very essence of Normalux captured in a single light fitting.

This Environmental Product Declaration (EPD), represents the GS emergency lighting family, distinguished by the following technical characteristics:

Table 1. Technical characteristics

NORMALUX GS	Emergency Lighting Ref. G-150L
	LED CE UNE 60598-2-22 230V 50/60HZ

Emergency Lighting: GS. Reference: G-150L, manufactured by Normalux. Lumens 165 lm. Autonomy (h) 1h. Operating mode: Non Maintained. Installation: Surface Mounting. Light source: Led. Battery of: Ni-Cd 3.6V/600mAh. IP: 44. IK: 07. Version: Standard. Color: White. Casing: Self-Extinguishing PC. Voltage: 230V 50/60Hz.
Dimensions (mm): 250 x 100 x 40 mm. Manufactured according UNE 60598-2-22 regulations. Compatible with S-TE remote control

Lumen output (lm)	165
Colour temperature (K)	5700
Light source	Led
Duration (h)	1
Battery type	Ni-Cd 3.6 V/600mAh
Charging time	Max. 12 h
Power (W)	0,6
Type of lighting unit operation	Non-Maintained
Class	II
IP protection rating	44
IK protection rating	07
Operating temperature (ºC)	5 to 35

For more information please visit: https://www.normalux.com/GS

Dimensions (mm):

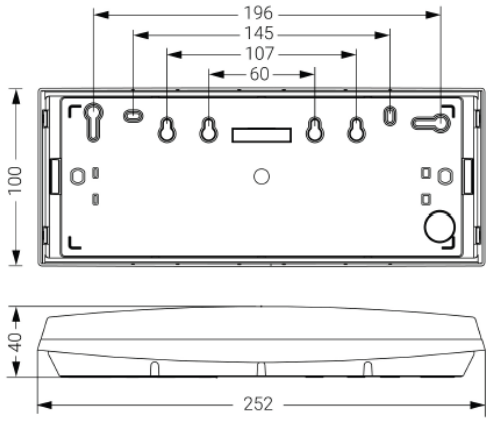

The EPD is structured according to the life cycle stages established by the standards Product Category Rules (PCR-ed4-EN-2021 09 06) and the Product Specific Rules (PSR-0007-ed2.1-EN-2023 12 08) and is based on the UNE-EN 15804:2012+A2:2020 standard. These stages cover the “cradle to grave” phases (A1-C4). The primary data used in the LCA calculation are representative of GS production and sales for 2025.

FUNCTIONAL UNIT | REFERENCE PRODUCT

The **reference product** is the self-contained emergency luminaire GS, with the reference code G-150L. It is the highest-selling product within the GS family, accounting for 84,4 % of the total sales in this product line during the period considered. The reference product, and homogeneous family, correspond to the escape route emergency lighting systems, designed to facilitate the evacuation of personnel by lighting up exit routes and obstacles in the event of a power outage.

The **functional unit (FU)** of the study is to facilitate the evacuation of the public by providing 45 lumens of lighting for 1 hour in the event of an electrical power cut, operating in a non-maintained mode. This function is provided for ten years by its self-contained power supply. This functional unit is chosen in accordance with the specifications of the Product Category Rules (PCR-ed4-EN-2021 09 06) and the Product Specific Rules (PSR-0007-ed2.1-EN-2023 12 08), which apply to self-contained emergency lighting systems.

The following information has been used to generate the Environmental Product Declaration.

Table 2. Methodological information

Methodological information	
Product name	GS
Functional unit	Facilitate the evacuation of the public by providing 45 lumens of lighting for 1 hour in the event of an electrical power cut, operating in a non-maintained mode. This function is provided for ten years by its self-contained power supply.
Reference Flow	0,2727
Declared unit	One GS G-150L luminaire providing a luminous output of 165 lumens and with an autonomy of 1 hour over an assigned lifetime of 10 years.
Reference service life	10 years
Life cycle stages covered	Cradle to grave
Product category according to PSR	Self-Contained Emergency Lighting
Subproduct category according to PSR	Escape route emergency Lighting (SCELL)

The **reference flow** for this study is defined as:

$$\frac{87.600\ (\mathrm{h})}{\text{assigned product lifetime of the reference product (h)}} \times \frac{45\ (\mathrm{lm})}{\text{outgoing luminous flux of the reference product (lm)}} =$$

Consequently, the reference flow of the reference product corresponds to:

(87.600h/87.600h) x (45 lm/ 165 lm) = 0,2727

The **reference service life (RSL)** is 10 years, based on an annual usage period of 8.751 hours of energy consumption and 9 hours of non-consumption per year, over a total period of 10 years, in accordance with the Product Specific Rules (PSR-0007-ed2.1-EN-2023 12 08) for escape route lighting. The **declared service life (DSL)** refers to the period during which the luminaire is expected to operate under normal conditions before being taken out of service and is also 10 years.

In addition to the functional unit, the **declared unit** is defined as a single GS G-150L luminaire that provides 165 lumens of emergency lighting over a reference service life of 10 years.

1.3 HOMOGENEOUS ENVIRONMENTAL FAMILY

The reference product represents the GS family, all the products in this family of emergency luminaires differ in terms of power and weight. **Table 3** shows the range of variations.

Table 3. Range of variation within the family of products.

GS family	Unit	Reference product's value GS G-150L	Minimum value in product range	Maximum value in product range
Product's gross weight	kg	0,4323	0,4043	0,5154
Power	W	0,6	0,4	3,67
Lumens	Lumen	165	70	500

The rest of the products that belong to the same homogeneous family and are covered by this PEP are listed in **Table 4.**

Table 4. Product references included in the GS homogeneous family.

	Product references				
	Standard			**Autotest**	
	Manteined	**No manteined**		**Manteined**	**No manteined**
GS (IP44)	GL-60	G-60L	G-500L	GA-60L	GAL-60
	GL-100	G-100L	G2-100L	GA-100L	GAL-150
	GL-150	G-150L	G2-300L	GA-150L	GAL-200
	GL-200	G-200L	G3-100L	GA-200L	GAL-3000
	GL-300	G-300L	G3-200L	GA-300L	
	GL3-100	G-400L		GA-400L	
				GA3-200L	
GSE (IP65)	GSEL-60	GSE-60L	GSE-500L	GSEAL-60	GSEA-60L
	GSEL-100L	GSE-100L	GSE2-100L	GSEAL-150L	GSEA-100L
	GSEL-150L	GSE-150L	GSE2-300L	GSEAL-200L	GSEA-150L
	GSEL-200L	GSE-200L	GSE3-100L	GSEAL-300L	GSEA-200L
	GSEL-300L	GSE-300L	GSE3-200L		GSEA-300L
	GSEL-400L	GSE-400L			GSEA-400L
	GSEL3-100L				GSEA-500L
					GSEA2-300L
					GSEA3-200L

The present PEP declaration is valid for all the products in the described homogeneous environmental family. The extrapolation coefficients at product level (declared unit) and the information of the products included in the homogeneous environmental family can be found in the spreadsheets provided as annex. This information shall be used by the PEP user to extrapolate the impact of a product from the GS family, based on technical parameters of the considered product, as shown in Annex I (Annex I. Extrapolation coefficients).

2. CONSTITUENT MATERIALS

Table 5. Weigh by material of the reference product.

	kg	%
Plastics		
Polycarbonate	0,2737	100
TOTAL	**0,2737**	**100**
Metals		
Steel	0,0006	100
TOTAL	**0,0006**	**100**
Electric components		
PCB circuit	0,042	22,70%
Battery	0,064	34,59%
Led	0,079	42,70%
TOTAL	**0,185**	**100**
Packaging		
100% recycled cardboard	0,042	99,38%
Pallet	1,25E-04	0,30%
Polyethylene film	1,38E-04	0,33%
TOTAL	**4,23E-02**	**100**
Others		
PC dye	0,0098	100
TOTAL	**0,0098**	**100**

Graph 1. Weight distribution by material type.

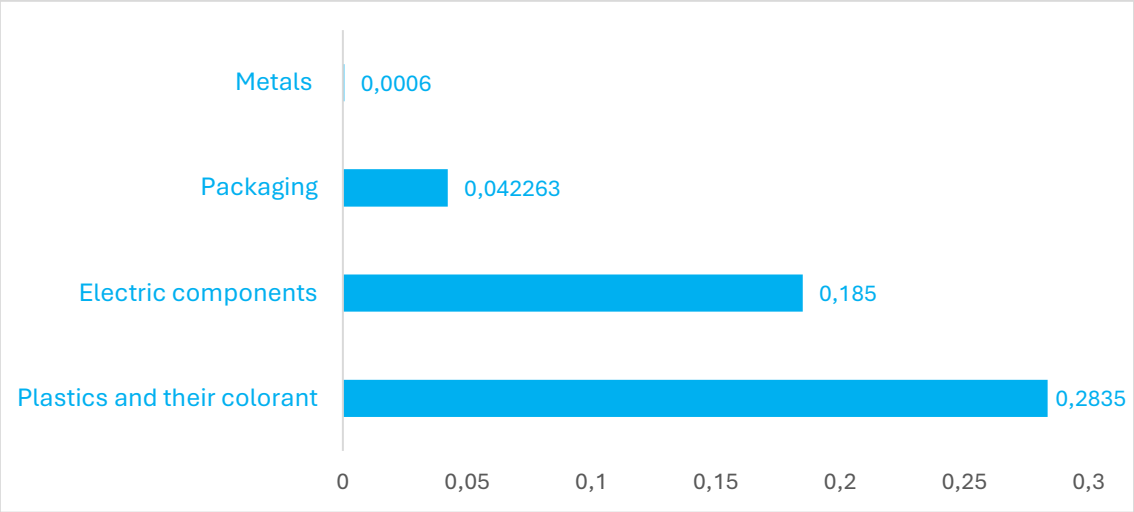

ADDITIONAL ENVIRONMENTAL INFORMATION

Normagrup has integrated environmental protection as a key pillar of its activity, implementing measures aimed at preventing, reducing, and controlling the environmental impacts associated with its production processes and products. Since 2019, we have been calculating our organizational carbon footprint and are working to reduce our greenhouse gas emissions. In line with this goal, we have created an emission absorption project: Normagrup Forest.

The following sections outline the measures taken by Normagrup to minimise the product's environmental impact across all stages of the product's life cycle.

MANUFACTURING: A1-A3

A1 – Supply of raw materials.

A2 – Transport of raw materials.

A3 – Manufacturing.

Regarding the supply of raw materials, all suppliers with whom we maintain supply relationships have been previously assessed to be aligned with our corporate principles. They have accepted our Code of Conduct and are committed to meeting our environmental requirements.

For packaging, Normagrup uses only 100% recycled cardboard as primary and secondary packaging.

As for the manufacturing, Normagrup has a photovoltaic electricity production centre at the main production plant, which allows to reduce the need for non-renewable electricity in our facilities.

DISTRIBUTION AND INSTALLATION: A4-A5

A4 – Distribution.

A5 – Installation.

The reduced dimensions of the product allow for a smart transportation by maximising the available space during the distribution stage. The product comes in collective boxes of 20 units each. One pallet (1200x800mm) carries 16 collective boxes of 20 units each, that is, one pallet carries 320 units of GS.

During installation, energy consumption is considered negligible because it is carried out manually, although electric tools such as drills may be used. The product comes ready to be installed by the end-user. In this stage, the product is unpacked and therefore the packaging waste is generated during the installation. The waste of packaging materials is treated using default values according to PCR-ed4-EN-2021 09 06 and PSR-0014-ED2.0-EN-2023 07 13 for distances and waste treatment statistics are based on Eurostat.

USE: B1-B7

B1 - Use.

B2 - Maintenance.

B3 - Repair.

B4 - Replacement.

B5 - Rehabilitation.

B6 – In service energy use.

B7 - In-service water use

The use stage concerns the maintenance (B2) during the product's life cycle and the electricity consumption (B6) associated with the operation of the product.

As a maintenance task, two batteries will be replaced over the product's service life, since a service life of 4 years is ensured for the battery, and it is a replaceable component. The waste treatment of the initial battery is considered in this stage.

The electricity consumption during the use phase is calculated based on the Spain electrical mix, since more than 76% of the sales are made in this country, and the remaining sales happened in the European market. Therefore, the electricity consumption scenario is based on the average Spanish electricity grid mix and is estimated over a lifetime of 10 years, for 8.760 operating hours a year and for 0,7W of power.

The product has no direct emissions (B1) and is designed so that no parts replacement is necessary (B4). Additionally, no standard repairs (B3) or refurbishments (B5) take place as of now. The use of the product does not involve water consumption (B7).

C1-C4 END OF LIFE

C1 - Deconstruction/Demolition

C2 – Waste transport

C3 – Waste processing

C4 - Provision

The product is required to be professionally collected and recycled in accordance with the EU Directive 2012/19/EU on Waste Electrical and Electronic Equipment (WEEE). The company fulfils its responsibility within the EU by participating in national WEEE schemes. We meet our extended producer responsibility obligations by adhering to a national SCRAP.

The waste treatment scenario of each material and component was determined based on public data provided by Eurostat in 2022 and available datasets.

Table 5. Waste treatment scenarios considered.

Scenario	Recycling and incineration with energy recovery	Incineration and landfill	Modelling assumptions
Wire	62%	38%	Transport (100 km) and treatments based on Eurostat for Europe 2022.
Metal	77%	23%	Transport (100 km) and treatments based on Eurostat for Europe 2022.
Plastic	40%	60%	Transport (100 km) and treatments based on Eurostat for Europe 2022.
Electronic	70%	30%	Transport (100 km) and treatments based on available datasets.

3. ENVIRONMENTAL IMPACTS

The environmental impact assessment examines the stages of the reference product's life cycle: manufacturing, distribution, installation, use, and end of life. It is representative of the products marketed and used in Europe.

The Life Cycle Assessment (LCA) model was developed using the online tool èdit® in combination with the SimaPro 10.2.0.2 software to evaluate the environmental impact associated with the reference product. Data concerning material and energy flows entering the product system were primarily sourced from the Ecoinvent v3.11.1 database.

The impact indicators and models used are those specified by the reference standards PCR-ed3-EN-2015 04 02 and PSR-0007-ed2.1-EN-2023 12 08. The environmental indicators are calculated for the total life cycle and each life cycle stage (i.e., manufacturing, distribution, installation, use and end-of-life) of the reference product. This environmental declaration has been developed by considering an outgoing luminous flux of 45 lumens for 1 hour in the event of an electrical power cut, over a reference lifetime of 10 years.

For the use stage, the electricity consumption scenario considers the geographic area of Europe, specifically Spain, since nearly 90% of the sales were made in Spain.
Overall, datasets were selected based on their geographical representativeness, prioritizing those most closely aligned with the location of each life cycle stage.

RESULTS

Table 6. Results of mandatory inventory indicators per F.U (for 45 lumens for 1 hour in the event of an electrical power cut, over 10 years) of GS emergency lighting.

Stage	Unit	1. Manufacturing			2. Distribution	3. Installation	4. Use		5. End of life			Total
Impact category		A1	A2	A3	A4	A5	B2	B6	C2	C3	C4	
Climate change - total	kg CO2 eq.	7,77E+00	1,78E-02	1,38E-01	2,15E-02	1,88E-03	1,03E+00	2,78E+00	2,21E-03	2,57E-01	2,89E-01	1,23E+01
Climate change - fossil fuels	kg CO2 eq.	7,76E+00	1,78E-02	1,35E-01	2,15E-02	2,51E-04	1,02E+00	2,73E+00	2,21E-03	2,57E-01	7,15E-02	1,20E+01
Climate change - land use and land use transformation	kg CO2 eq.	1,47E-02	6,54E-06	9,30E-05	7,13E-06	9,09E-08	4,09E-03	3,63E-02	7,31E-07	1,25E-04	1,22E-05	5,53E-02
Climate change - biogenic	kg CO2eq.	1,34E-02	3,62E-06	2,68E-03	4,52E-06	1,63E-03	2,05E-03	8,58E-03	4,65E-07	7,46E-05	1,85E-05	2,85E-02
Ozone depletion	kg CFC-11 eq.	0,00E+00	0,00E+00	0,00E+00	0,00E+00	0,00E+00	0,00E+00	0,00E+00	0,00E+00	0,00E+00	0,00E+00	0,00E+00
Acidification	mol H+ eq.	-1,70E-02	0,00E+00	0,00E+00	0,00E+00	0,00E+00	0,00E+00	0,00E+00	0,00E+00	0,00E+00	2,17E-01	2,00E-01
Freshwater eutrophication	kg P eq.	-3,52E-03	3,62E-06	2,68E-03	4,52E-06	1,63E-03	2,05E-03	8,58E-03	4,65E-07	7,46E-05	2,17E-01	2,29E-01
Marine aquatic eutrophication	kg N eq.	7,70E-05	3,65E-10	1,72E-09	4,67E-10	5,22E-12	1,25E-06	6,42E-08	4,82E-11	2,53E-09	3,01E-10	7,83E-05
Terrestrial eutrophication	mol N eq.	7,28E-02	1,38E-04	6,83E-04	7,16E-05	1,12E-06	2,58E-02	1,27E-02	7,09E-06	3,45E-04	5,95E-05	1,13E-01
Photochemical ozone formation	kg NMVOC eq.	5,57E-03	1,11E-06	4,19E-05	1,46E-06	2,01E-08	4,99E-04	6,84E-04	1,51E-07	7,70E-05	9,50E-06	6,89E-03
Abiotic resource depletion - metals and minerals	kg Sb eq.	1,90E-02	3,86E-05	1,27E-04	2,39E-05	1,11E-06	1,89E-02	2,31E-03	2,39E-06	8,51E-05	6,31E-05	4,06E-02
Abiotic resource depletion - fossils	MJ	1,04E-01	4,25E-04	1,25E-03	2,60E-04	3,91E-06	1,29E-02	2,45E-02	2,60E-05	8,23E-04	1,62E-04	1,44E-01
Water requirement	m3 depriv.	3,43E-02	1,40E-04	4,29E-04	1,06E-04	1,97E-06	5,40E-03	9,46E-03	1,07E-05	3,28E-04	5,37E-05	5,02E-02

Table 7. Results of mandatory inventory indicators per F.U (for 45 lumens for 1 hour in the event of an electrical power cut, over 10 years) of GS emergency lighting

Stage	Unit	1. Manufacturing			2. Distribution	3. Installation	4. Use		5. End of life			Total
Impact category		A1	A2	A3	A4	A5	B2	B6	C2	C3	C4	
Use of renewable primary energy (excl. resources used as raw materials)	MJ	1,38E+01	3,70E-03	1,12E+00	4,95E-03	6,65E-05	4,67E+00	3,59E+01	5,11E-04	1,37E-01	1,44E+00	5,71E+01
Use of renewable primary energy resources (used as raw materials)	MJ	1,95E-01	0,00E+00	0,00E+00	0,00E+00	0,00E+00	0,00E+00	0,00E+00	0,00E+00	0,00E+00	-1,43E+00	-1,23E+00
Total use of renewable primary energy resources	MJ	1,40E+01	3,70E-03	1,12E+00	4,95E-03	6,65E-05	4,67E+00	3,59E+01	5,11E-04	1,37E-01	1,35E-02	5,59E+01
Use of non-renewable primary energy (excl. resources used as raw materials)	MJ	5,97E+01	1,81E-02	2,14E+00	2,39E-02	3,20E-04	4,79E+00	5,04E+01	2,46E-03	3,72E-01	5,68E-02	1,18E+02
Use of non-renewable primary energy resources (used as raw materials)	MJ	1,80E-03	0,00E+00	0,00E+00	0,00E+00	0,00E+00	0,00E+00	0,00E+00	0,00E+00	0,00E+00	0,00E+00	1,80E-03
Total use of non-renewable primary energy resources	MJ	5,97E+01	1,81E-02	2,14E+00	2,39E-02	3,20E-04	4,79E+00	5,04E+01	2,46E-03	3,72E-01	5,68E-02	1,18E+02
Use of secondary materials	kg	1,15E-02	0,00E+00	0,00E+00	0,00E+00	0,00E+00	0,00E+00	0,00E+00	0,00E+00	0,00E+00	0,00E+00	1,15E-02
Use of renewable secondary fuels	MJ	0,00E+00	0,00E+00	0,00E+00	0,00E+00	0,00E+00	0,00E+00	0,00E+00	0,00E+00	0,00E+00	0,00E+00	0,00E+00
Use of non-renewable secondary fuels	MJ	0,00E+00	0,00E+00	0,00E+00	0,00E+00	0,00E+00	0,00E+00	0,00E+00	0,00E+00	0,00E+00	0,00E+00	0,00E+00
Net use of fresh water	m3	8,52E-02	2,86E-05	6,65E-04	3,76E-05	-3,01E-06	3,59E-02	4,28E-02	3,88E-06	5,02E-04	1,66E-05	1,65E-01
Hazardous waste	kg	4,67E-03	5,67E-06	1,15E-03	7,66E-06	1,05E-05	8,99E-03	3,55E-03	7,91E-07	9,81E-02	1,10E-03	1,18E-01
Non-hazardous waste	kg	4,60E-01	1,00E-02	9,48E-03	1,45E-02	1,30E-03	3,96E-01	3,58E-01	1,50E-03	2,64E-02	2,62E-02	1,30E+00
Radioactive waste	kg	5,49E-04	6,54E-08	2,31E-05	8,92E-08	1,17E-09	6,87E-04	6,42E-04	9,21E-09	1,68E-06	2,84E-07	1,90E-03

Table 8. Results of mandatory inventory indicators per F.U (for 45 lumens for 1 hour in the event of an electrical power cut, over 10 years) of GS emergency lighting.

Stage	Unit	1. Manufacturing			2. Distribution	3. Installation	4. Use		5. End of life			Total
Impact category		A1	A2	A3	A4	A5	B2	B6	C2	C3	C4	
Components for reuse	kg	3,41E-05	0,00E+00	0,00E+00	0,00E+00	0,00E+00	0,00E+00	0,00E+00	0,00E+00	0,00E+00	0,00E+00	3,41E-05
Materials for recycling	kg	0,00E+00	0,00E+00	8,09E-03	0,00E+00	6,93E-03	1,68E-02	0,00E+00	0,00E+00	2,77E-04	0,00E+00	3,21E-02
Materials for energy recovery	kg	0,00E+00	0,00E+00	0,00E+00	0,00E+00	0,00E+00	0,00E+00	0,00E+00	0,00E+00	0,00E+00	0,00E+00	0,00E+00
Exported energy	MJ	0,00E+00	0,00E+00	8,33E-03	0,00E+00	3,34E-02	0,00E+00	0,00E+00	0,00E+00	0,00E+00	1,47E-04	4,19E-02
Total use of primary energy during the life cycle	MJ	7,37E+01	2,18E-02	3,26E+00	2,88E-02	3,86E-04	9,46E+00	8,63E+01	2,97E-03	5,09E-01	7,03E-02	1,73E+02
Emission of fine particles	incidence of diseases	4,42E-04	1,27E-09	1,06E-08	1,71E-09	2,09E-11	7,62E-08	7,25E-08	1,76E-10	4,83E-09	5,93E-10	4,42E-04
Ionizing radiation, human health	kBq U-235 eq.	1,05E+00	2,65E-04	1,01E-01	3,62E-04	4,74E-06	4,36E-01	2,80E+00	3,73E-05	6,31E-03	1,10E-03	4,40E+00
Ecotoxicity (fresh water)	CTUe	1,19E+02	3,03E-02	4,07E-01	4,02E-02	4,93E-02	8,05E+01	9,28E+00	4,15E-03	3,55E+00	6,27E-01	2,13E+02
Human toxicity, carcinogenic effects	CTUh	1,59E-04	3,15E-12	1,71E-10	3,65E-12	1,03E-13	1,22E-09	1,24E-09	3,75E-13	2,90E-10	3,38E-11	1,60E-04
Human toxicity, non-carcinogenic effects	CTUh	1,32E-07	1,39E-10	1,56E-09	1,89E-10	8,55E-12	1,72E-08	5,87E-08	1,95E-11	8,04E-10	5,35E-10	2,12E-07
Impacts related to land use/soil quality	-	3,81E+01	1,26E-01	1,85E-01	1,79E-01	2,48E-03	2,13E+01	2,29E+01	1,85E-02	5,88E-01	4,93E-02	8,35E+01
Biogenic carbon content of the associated packaging	kg of C	-4,63E-03	0,00E+00	0,00E+00	0,00E+00	0,00E+00	0,00E+00	0,00E+00	0,00E+00	0,00E+00	5,92E-02	5,46E-02
Biogenic carbon content of the product	kg of C	0,00E+00	0,00E+00	0,00E+00	0,00E+00	0,00E+00	0,00E+00	0,00E+00	0,00E+00	0,00E+00	0,00E+00	0,00E+00

Table 9. Results of mandatory inventory indicators per D.U (for 165 lumens for 10 years) of GS emergency lighting.

Stage	Unit	1. Manufacturing			2. Distribution	3. Installation	4. Use		5. End of life			Total
Impact category		A1	A2	A3	A4	A5	B2	B6	C2	C3	C4	
Climate change - total	kg CO2 eq.	2,85E+01	6,54E-02	5,05E-01	7,87E-02	6,89E-03	3,77E+00	1,02E+01	8,10E-03	2,57E-01	2,89E-01	43,6660
Climate change - fossil fuels	kg CO2 eq.	2,85E+01	6,54E-02	4,95E-01	7,87E-02	9,20E-04	3,75E+00	1,00E+01	8,10E-03	2,57E-01	7,15E-02	43,2042
Climate change - land use and land use transformation	kg CO2 eq.	5,39E-02	2,40E-05	3,41E-04	2,61E-05	3,33E-07	1,50E-02	1,33E-01	2,68E-06	1,25E-04	1,22E-05	0,2025
Climate change - biogenic	kg CO2eq.	4,94E-02	1,33E-05	9,84E-03	1,66E-05	5,97E-03	7,51E-03	3,15E-02	1,71E-06	7,46E-05	1,85E-05	0,1043
Ozone depletion	kg CFC-11 eq.	0,00E+00	0,00E+00	0,00E+00	0,00E+00	0,00E+00	0,00E+00	0,00E+00	0,00E+00	0,00E+00	0,00E+00	0,0000
Acidification	mol H+ eq.	-6,22E-02	0,00E+00	0,00E+00	0,00E+00	0,00E+00	0,00E+00	0,00E+00	0,00E+00	0,00E+00	2,17E-01	0,1549
Freshwater eutrophication	kg P eq.	-1,28E-02	1,33E-05	9,84E-03	1,66E-05	5,97E-03	7,51E-03	3,15E-02	1,71E-06	7,46E-05	2,17E-01	0,2593
Marine aquatic eutrophication	kg N eq.	2,82E-04	1,34E-09	6,30E-09	1,71E-09	1,92E-11	4,59E-06	2,35E-07	1,77E-10	2,53E-09	3,01E-10	0,0003
Terrestrial eutrophication	mol N eq.	2,68E-01	5,08E-04	2,51E-03	2,63E-04	4,09E-06	9,48E-02	4,67E-02	2,60E-05	3,45E-04	5,95E-05	0,4128
Photochemical ozone formation	kg NMVOC eq.	2,04E-02	4,09E-06	1,54E-04	5,36E-06	7,38E-08	1,83E-03	2,51E-03	5,53E-07	7,70E-05	9,50E-06	0,0250
Abiotic resource depletion - metals and minerals	kg Sb eq.	6,96E-02	1,42E-04	4,66E-04	8,75E-05	4,05E-06	6,95E-02	8,46E-03	8,75E-06	8,51E-05	6,31E-05	0,1484
Abiotic resource depletion - fossils	MJ	3,81E-01	1,56E-03	4,60E-03	9,52E-04	1,43E-05	4,75E-02	8,99E-02	9,52E-05	8,23E-04	1,62E-04	0,5271
Water requirement	m3 depriv.	1,26E-01	5,14E-04	1,57E-03	3,90E-04	7,21E-06	1,98E-02	3,47E-02	3,94E-05	3,28E-04	5,37E-05	0,1831

Table 10. Results of mandatory inventory indicators per D.U (for 165 lumens for 10 years) of GS emergency lighting.

Stage	Unit	1. Manufacturing			2. Distribution	3. Installation	4. Use		5. End of life			Total
Impact category		A1	A2	A3	A4	A5	B2	B6	C2	C3	C4	
Use of renewable primary energy (excl. resources used as raw materials)	MJ	5,08E+01	1,36E-02	4,13E+00	1,82E-02	2,44E-04	1,71E+01	1,31E+02	1,87E-03	1,37E-01	1,44E+00	205,1078
Use of renewable primary energy resources (used as raw materials)	MJ	7,16E-01	0,00E+00	0,00E+00	0,00E+00	0,00E+00	0,00E+00	0,00E+00	0,00E+00	0,00E+00	-1,43E+00	-0,7119
Total use of renewable primary energy resources	MJ	5,15E+01	1,36E-02	4,13E+00	1,82E-02	2,44E-04	1,71E+01	1,31E+02	1,87E-03	1,37E-01	1,35E-02	204,3959
Use of non-renewable primary energy (excl. resources used as raw materials)	MJ	2,19E+02	6,63E-02	7,83E+00	8,75E-02	1,17E-03	1,76E+01	1,85E+02	9,03E-03	3,72E-01	5,68E-02	429,8244
Use of non-renewable primary energy resources (used as raw materials)	MJ	6,60E-03	0,00E+00	0,00E+00	0,00E+00	0,00E+00	0,00E+00	0,00E+00	0,00E+00	0,00E+00	0,00E+00	0,0066
Total use of non-renewable primary energy resources	MJ	2,19E+02	6,63E-02	7,83E+00	8,75E-02	1,17E-03	1,76E+01	1,85E+02	9,03E-03	3,72E-01	5,68E-02	429,8310
Use of secondary materials	kg	4,20E-02	0,00E+00	0,00E+00	0,00E+00	0,00E+00	0,00E+00	0,00E+00	0,00E+00	0,00E+00	0,00E+00	0,0420
Use of renewable secondary fuels	MJ	0,00E+00	0,00E+00	0,00E+00	0,00E+00	0,00E+00	0,00E+00	0,00E+00	0,00E+00	0,00E+00	0,00E+00	0,0000
Use of non-renewable secondary fuels	MJ	0,00E+00	0,00E+00	0,00E+00	0,00E+00	0,00E+00	0,00E+00	0,00E+00	0,00E+00	0,00E+00	0,00E+00	0,0000
Net use of fresh water	m3	3,13E-01	1,05E-04	2,44E-03	1,38E-04	-1,10E-05	1,32E-01	1,57E-01	1,42E-05	5,02E-04	1,66E-05	0,6047
Hazardous waste	kg	1,72E-02	2,08E-05	4,21E-03	2,81E-05	3,84E-05	3,30E-02	1,30E-02	2,90E-06	9,81E-02	1,10E-03	0,1666
Non-hazardous waste	kg	1,70E+00	3,68E-02	3,48E-02	5,32E-02	4,75E-03	1,45E+00	1,31E+00	5,50E-03	2,64E-02	2,62E-02	4,6526
Radioactive waste	kg	2,01E-03	2,40E-07	8,48E-05	3,27E-07	4,29E-09	2,52E-03	2,35E-03	3,38E-08	1,68E-06	2,84E-07	0,0070

Table 11. Results of mandatory inventory indicators per D.U (for 165 lumens for 10 years) of GS emergency lighting.

Stage	Unit	1. Manufacturing			2. Distribution	3. Installation	4. Use		5. End of life			Total
Impact category		A1	A2	A3	A4	A5	B2	B6	C2	C3	C4	
Components for reuse	kg	1,25E-04	0,00E+00	0,00E+00	0,00E+00	0,00E+00	0,00E+00	0,00E+00	0,00E+00	0,00E+00	0,00E+00	0,0001
Materials for recycling	kg	0,00E+00	0,00E+00	2,97E-02	0,00E+00	2,54E-02	6,16E-02	0,00E+00	0,00E+00	2,77E-04	0,00E+00	0,1170
Materials for energy recovery	kg	0,00E+00	0,00E+00	0,00E+00	0,00E+00	0,00E+00	0,00E+00	0,00E+00	0,00E+00	0,00E+00	0,00E+00	0,0000
Exported energy	MJ	0,00E+00	0,00E+00	3,05E-02	0,00E+00	1,22E-01	0,00E+00	0,00E+00	0,00E+00	0,00E+00	1,47E-04	0,1532
Total use of primary energy during the life cycle	MJ	2,70E+02	7,99E-02	1,20E+01	1,06E-01	1,42E-03	3,47E+01	3,16E+02	1,09E-02	5,09E-01	7,03E-02	634,2269
Emission of fine particles	incidence of diseases	1,62E-03	4,65E-09	3,89E-08	6,27E-09	7,66E-11	2,80E-07	2,66E-07	6,47E-10	4,83E-09	5,93E-10	0,0016
Ionizing radiation, human health	kBq U-235 eq.	3,87E+00	9,73E-04	3,70E-01	1,33E-03	1,74E-05	1,60E+00	1,03E+01	1,37E-04	6,31E-03	1,10E-03	16,1249
Ecotoxicity (fresh water)	CTUe	4,36E+02	1,11E-01	1,49E+00	1,48E-01	1,81E-01	2,95E+02	3,40E+01	1,52E-02	3,55E+00	6,27E-01	771,4078
Human toxicity, carcinogenic effects	CTUh	5,85E-04	1,16E-11	6,28E-10	1,34E-11	3,78E-13	4,47E-09	4,53E-09	1,37E-12	2,90E-10	3,38E-11	0,0006
Human toxicity, non-carcinogenic effects	CTUh	4,86E-07	5,11E-10	5,73E-09	6,93E-10	3,14E-11	6,30E-08	2,15E-07	7,16E-11	8,04E-10	5,35E-10	0,0000
Impacts related to land use/soil quality	-	1,40E+02	4,63E-01	6,78E-01	6,57E-01	9,08E-03	7,83E+01	8,41E+01	6,79E-02	5,88E-01	4,93E-02	304,6133
Biogenic carbon content of the associated packaging	kg of C	-1,70E-02	0,00E+00	0,00E+00	0,00E+00	0,00E+00	0,00E+00	0,00E+00	0,00E+00	0,00E+00	5,92E-02	0,0423
Biogenic carbon content of the product	kg of C	0,00E+00	0,00E+00	0,00E+00	0,00E+00	0,00E+00	0,00E+00	0,00E+00	0,00E+00	0,00E+00	0,00E+00	0,0000

4. EXTRAPOLATION RULES

The extrapolation rules followed are based on the specifications of the PCR-ed4-EN-2021 09 06 and the Product Specific Rules (PSR-0007-ed2.1-EN-2023 12 08).

GS G-150L was selected as the representative product due to the market share of GS. It is the highest-selling product within the GS family, accounting for 84,4% of the total sales in this product line during the period considered.

The different products within the GS family differ in terms of power and lumens. In this LCA and EPD, the GSE product references are also assessed, as they are composed of the same raw materials, differing solely in their percentage composition and product weight.
Other product parameters that vary among the various products of the family are weight of parts, product mass and energy consumption. A sensitivity analysis was carried out to assess the potential variability of the most influential parameters: product mass and energy consumption. Additionally, extrapolation coefficients were calculated and evaluated. In cases where multiple coefficients were available for a given stage, the most representative one was selected. For example, in the use stage, the extrapolation rule applicable to the electricity consumption was chosen.
The rules defined shall be applied using the Extrapolation rules file provided as annex (ANNEX I. Extrapolation coefficients.xlsx). Please refer to the table below for the data on reference product 'GS G-150L', needed to calculate the coefficients.

Table 12. Parameters of the reference product.

Parameter	Unit	Value for reference product
Power	W	0,6
Lumen	lm	165
Luminaire structure weight	kg	0,2841
Power supply equipment weight	kg	0,0640
Electronic component weight	kg	0,0420
Packaging weight	kg	0,0422
Product weight (no packaging)	kg	0,3901
Product weight (including packaging)	kg	0,4323

**The lumens and power are considered in the LCA to stablish the total energy consumption and calculate the results at FU level.*

The calculation of extrapolation coefficients at the functional unit level shall be performed using the following formula:

$$Extrapolation\ coefficient\ at\ the\ product\ level\ x\ \frac{Lighting\ output\ of\ reference\ product\ (lm)}{Lighting\ output\ of\ concerned\ product\ (lm)}$$